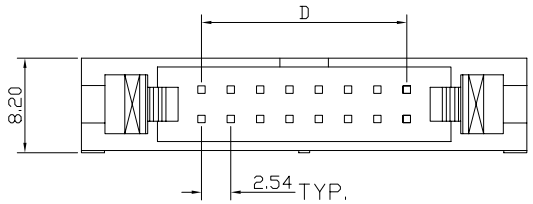

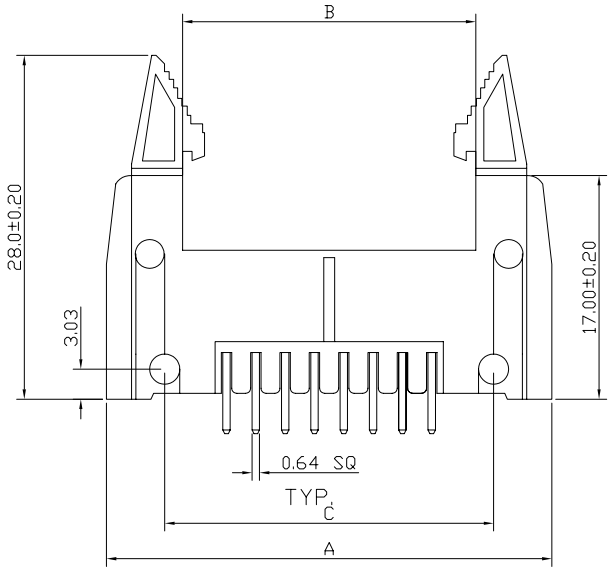

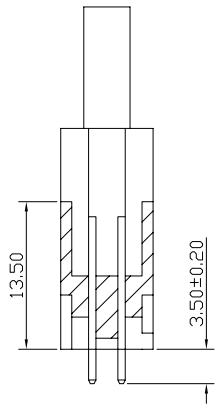

STRAIGHT TYPE

SPECIFICATIONS

Current Rating:3 Amps
Insulator resistance:5000 MΩ min.
Dielectric withstanding Voltage:500V AC/DC
Operating Temperature:-40° TO +105°c
Contact Material:Brass or Phosphor bronze
Insulator Material:Polyester,UL 94V-0
Standard: P.B.T.

Part No. System

M2533X - XX - XX

- Type No. — □:Straight Type; R: Right Angle Type
- No.of circuits
- □: Normal Part; G:ROHS Part; V:Lead Free
- Base No.

CONTACTS	A	B	C	D
10	32.00	18.25	21.80	10.17
14	37.05	23.20	26.90	15.25
16	39.60	25.90	29.35	17.79
20	44.70	31.00	34.50	22.67
26	52.32	38.50	42.20	38.49
30	57.40	43.70	47.30	35.57
34	62.50	48.90	52.30	40.65
40	70.10	56.35	59.90	46.27
50	82.85	69.15	72.70	60.97
60	95.50	81.90	85.35	73.67
64	100.60	87.10	90.50	78.75

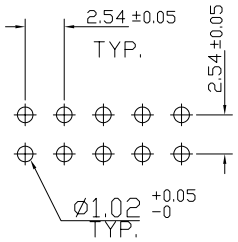

RECOMMENDED PCB LAYOUT

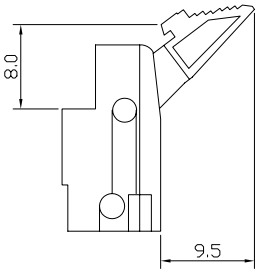

SHORT LEVER

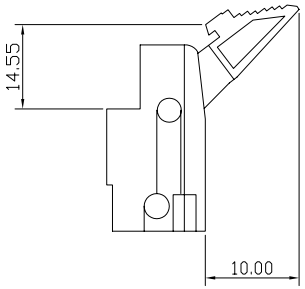

LONG LEVER

LONG CHU ELECTRONICS CO. LTD
LCU 龍竹企業股份有限公司

REV.	REV. RECORD	DATE
A	NEW RELEASE	3/28/03'

MATERIAL	SEE NOTE
UNIT	mm
DR.	NINA CHEN
RE.	
CHK.	
APP.	

DESCRIPTION: 2.54mm Shrouded Header with Eject Latch Levers

GENERAL TOLERANCE: 0. =±.50, 0.° =±5°, 0.0 =±.30, 0.0°=±1°, 0.00 =±.20

SIZE	P/N	
A4	M2533 series	
SCALE 1.5/1	REV. A	SHEET NO.